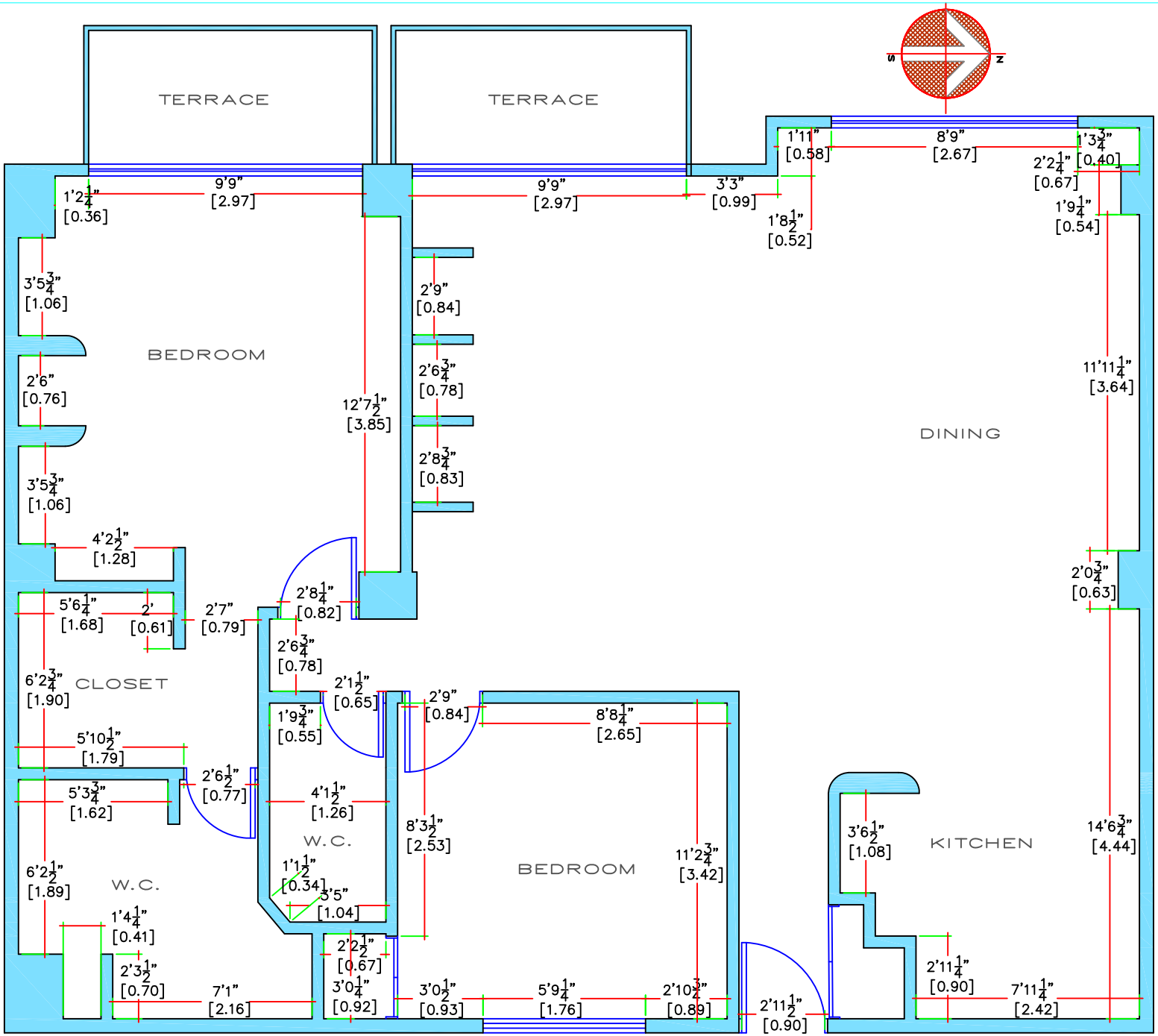

ARCHITECTURAL PLAN CM-303

MEASURE'S